530 Drive with 520REM Pumphead

500 series cased pump

Features and benefits

- Colour display and intuitive menu structures provide visual status indication and minimal key presses
- Flow rates from 0.17 ml/min (0.0027 USGPH) to 1500 ml/min (24 USGPH)
- 520R, 520R2, 520REL, 520REM, 520REH, 520RET and 505L pumpheads available as standard, others available on request
- 2,200:1 speed control range from 0.1 rpm to 220 rpm in 0.1 rpm increments
- Keypad incorporates 3-level security PIN lock
- IP31 (NEMA 2) and IP66 (NEMA 4X) cased pumps
- Dual voltage, 115 V/230 V 50/60 Hz
- Remote Analogue/Digital, RS232, RS485, PROFIBUS®, PROFINET®, SCADA and EtherNet/IP™ control options

530 Drive with 520REM Pumphead performance

520REM twin-roller pumpheads for LoadSure® element tubing — flow rates — ml/min (USGPH)			
Tube material	**Speed**	**3.2mm**	**6.4mm**
Pumpsil®, GORE® STA-PURE® Pump Tubing – Series PCS, GORE® STA-PURE® Pump Tubing – Series PFL	0.1 to 220rpm	0.18-390 (0–6.18)	0.70-1500 (0.01–23.8)
Marprene® TM, Bioprene® TM	0.1 to 220rpm	0.17-370 (0–5.86)	0.67-1500 (0.01–23.8)

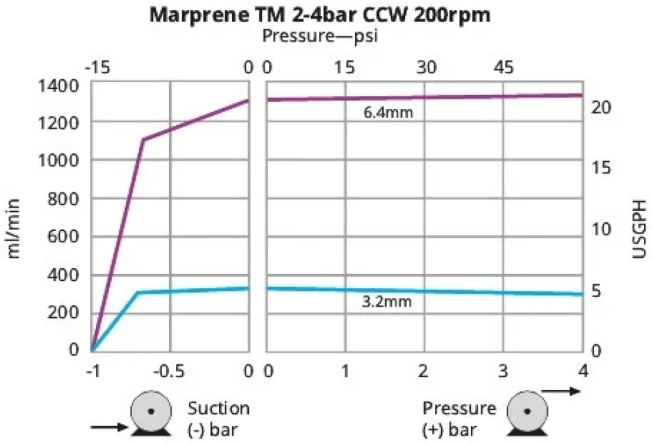

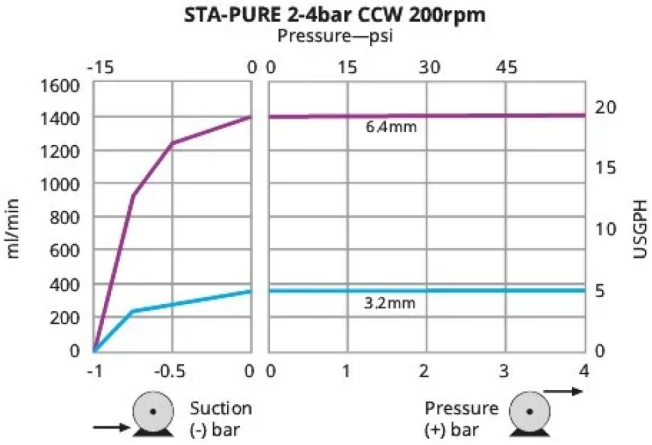

Technical specifications

	530 Drive with 520REM Pumphead
Pumphead number of rollers	2
Pumphead number of channels	1
Flow rate	0.17 ml/min to 1500 ml/min
Flow rate	0.0027 USGPH to 24 USGPH
Drive speed control ratio	2200:1
Drive speed	0.1 - 220 rpm
Operating temperature	5 °C to 40 °C (40 °F to 104 °F)
Weight	10.5 - 11.4 kg (23.2 - 25.1 lbs)
Drive weight	9.82, 10.7 kg (21.6, 23.6 lbs)
NEMA module weight	0.9 kg (1.9 lbs)
Control types	EtherNet/IP™, Profibus®, Profinet®, Remote Analogue/Digital, RS232, RS485, SCADA
Drive control options	Bp, BpN, Du, DuN, DuS, En, EnN, Pn, PnN, S, SN, U, UN, US
Standards	CE, cETLus, C-Tick, IRAM, NSF/ANSI 61 (for Marprene tubing and LoadSure elements), RoHS
Drive ingress protection	IP31, IP66, NEMA 2, NEMA 4X
Drive humidity	(Non-condensing) 80 % up to 31 °C (88 °F) decreasing linearly to 50 % at 40 °C (104 °F)
Drive noise	<70dBA at 1m
Max. altitude	2000 m (6562 ft)
Drive power supply	115/230 V 1ph 50/60 Hz 135 VA
Compatible tubing bore size	3.2, 6.4 mm

Materials of construction

	530 Drive with 520REM Pumphead
Bearings	Stainless steel
Driveshaft	Electroless nickel plated carbon steel
Drain port assembly	Hytrel, PP (polypropylene)
Drive casework	Pressure die-cast aluminium LM24
Drive casework coating	Alocrom pre-treatment, Exterior grade polyester powder coat
Guide roller assembly	MoS2 filled Nylon 6 (Nylatron)
Drive keypad/HMI	Polyester
Drive rear blanking plate	Stainless steel 304
Pumphead body assembly	Polycarbonate (PC), Polyphenylene sulphide (PPS)
Pumphead guard	Polycarbonate (PC)
Pumphead roller assembly	MoS2 filled Nylon 6 (Nylatron), Polyphenylene sulphide (PPS), Stainless steel 316
Pumphead rotor assembly	Polyphenylene sulphide (PPS), Stainless steel 316
Pumphead track	Polyphenylene sulphide (PPS)
Pumphead seals	Neoprene, PTFE
Switch-plate	Glass filled ABS plastic

Information listed covers the complete range.
For detailed specifications of individual models/components refer to user manual or contact WMFTS representative.

Dimensions

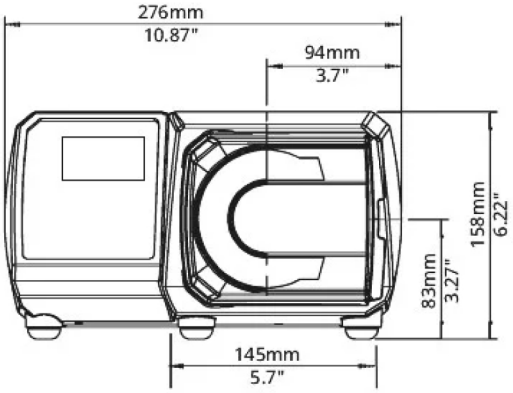

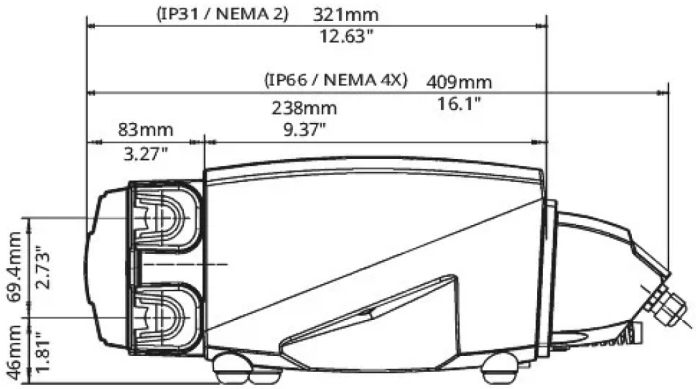

Control options

Key to pump drive models													
530S	**530SN**	**530U**	**530UN**	**530Du**	**530DuN**	**530Bp**	**530BpN**	**530US**	**530DuS**	**530En**	**530EnN**	**530Pn**	**530PnN**
Standard	Standard IP66 / NEMA 4X	Universal	Universal IP66 / NEMA 4X	Digital Universal	Digital Universal IP66 / NEMA 4X	Bus Pump / Profibus	Bus Pump / Profibus IP66 / NEMA 4X	Universal SCADA / IP66 / NEMA 4X	Digital Universal SCADA / IP66 / NEMA 4X	EtherNet/IP	EtherNet/IP / IP66 / NEMA 4X	PROFINET®	PROFINET® / IP66 / NEMA 4X

Manual control														
Pump drive	**530S**	**530SN**	**530U**	**530UN**	**530Du**	**530DuN**	**530Bp**	**530BpN**	**530US**	**530DuS**	**530En**	**530EnN**	**530Pn**	**530PnN**
Intuitive keypad and colour display	✔	✔	✔	✔	✔	✔	✔	✔	✔	✔	✔	✔	✔	✔
Choice of flowrate or speed display	✔	✔	✔	✔	✔	✔	✔	✔	✔	✔	✔	✔	✔	✔
Full calibration with choice of flow units	✔	✔	✔	✔	✔	✔	✔	✔	✔	✔	✔	✔	✔	✔
MemoDose function	✔	✔	✔	✔	✔	✔			✔	✔				
Auto restart facility	✔	✔	✔	✔	✔	✔	✔	✔	✔	✔	✔	✔	✔	✔
Leak detection			✔	✔	✔	✔	✔	✔	✔	✔	✔	✔	✔	✔
Dispensing (Network Control)											✔	✔	✔	✔

Remote control														
Pump drives	**530S**	**530SN**	**530U**	**530UN**	**530Du**	**530DuN**	**530Bp**	**530BpN**	**530US**	**530DuS**	**530En**	**530EnN**	**530Pn**	**530PnN**
Configurable Start/Stop and leak detector, via contact closure or 5V TTL or 24V industrial logic***			✔	✔	✔	✔					✔	✔	✔	✔
Pressure switch input, via contact closure or 5V TTL or 24V industrial logic***			✔		✔									
Configurable Start/Stop, leak detector and pressure switch input via 110 V industrial logic									✔	✔				
Direction change and auto/manual toggle input via contact closure or 5 V TTL or 24 V industrial logic			✔	✔	✔	✔								
Direction change and auto/manual toggle input via 110 V industrial logic									✔	✔				
Remote operation of MemoDose (foot/hand-switch or logic input)			✔	✔	✔	✔								
Four configurable digital status outputs through 24 V, 30 W relays				✔		✔								
Four configurable digital status outputs through 110 V relays									✔	✔				
Menu configurable logic outputs			✔		✔									
Remote pressure/flow sensors											✔	✔	✔	✔

Analogue speed control														
Pump drives	**530S**	**530SN**	**530U**	**530UN**	**530Du**	**530DuN**	**530Bp**	**530BpN**	**530US**	**530DuS**	**530En**	**530EnN**	**530Pn**	**530PnN**
Fully configurable inputs; 0-10 V or 4-20 mA			✔	✔	✔	✔			✔	✔				
Analogue outputs; 0-10 V, 4-20 mA			✔	✔	✔	✔			✔	✔				
Keypad/analogue input scaling (replacement of diaphragm pumps)					✔	✔				✔				
Tacho frequency output; 0-991 Hz			✔	✔	✔	✔								
2x sensor inputs 4-20 mA or 0-1000Hz*											✔	✔	✔	✔

Security														
Pump drives	**530S**	**530SN**	**530U**	**530UN**	**530Du**	**530DuN**	**530Bp**	**530BpN**	**530US**	**530DuS**	**530En**	**530EnN**	**530Pn**	**530PnN**
3-level Security PIN lock	✔	✔	✔	✔	✔	✔	✔	✔	✔	✔	✔	✔	✔	✔

Network communication														
Pump drives	**530S**	**530SN**	**530U**	**530UN**	**530Du**	**530DuN**	**530Bp**	**530BpN**	**530US**	**530DuS**	**530En**	**530EnN**	**530Pn**	**530PnN**
RS485 network control						✔				✔				
RS232 network control					✔									

Digital pump commands (Profibus / EtherNet/IP)														
Pump drives	**530S**	**530SN**	**530U**	**530UN**	**530Du**	**530DuN**	**530Bp**	**530BpN**	**530US**	**530DuS**	**530En**	**530EnN**	**530Pn**	**530PnN**
PROFIBUS® DP V0							✔	✔						
PROFINET® (CC-B & Netload Class III)													✔	✔
EtherNet/IP™											✔	✔		
Communication speeds from 9.6 kbits/s up to 12000 kbits/s							✔	✔						
Network speed: 10/100 Mbps - Full Duplex Operation											✔	✔		
Network speed: 100 Mbps - Full Duplex Operation													✔	✔
Auto-detect bus speed							✔	✔						
Speed set point							✔	✔			✔	✔	✔	✔
Speed feedback							✔	✔			✔	✔	✔	✔
Flow calibration function							✔	✔			✔	✔	✔	✔
Hours run							✔	✔			✔	✔	✔	✔
Revolution counter							✔	✔			✔	✔	✔	✔
Leak detection							✔	✔			✔	✔	✔	✔
Low fluid level alarm							✔	✔			✔	✔	✔	✔
Diagnostic feedback							✔	✔			✔	✔	✔	✔
Flow Totaliser											✔	✔	✔	✔
Sensor scaling											✔	✔	✔	✔
Dipensing (Network Control)**											✔	✔	✔	✔

*Range of 3rd party pressure/flow sensors supported—see compatible sensor list

**Dispensing (Network/Manual) - Store up to 100 recipes locally or via network control. Features include volume, flow rate, anti-drip, ramp and time delays. Run these as batches using local, network or manual keypad control.

***If you can't see the option you need, contact the engineered products team at WML to discuss

Product codes

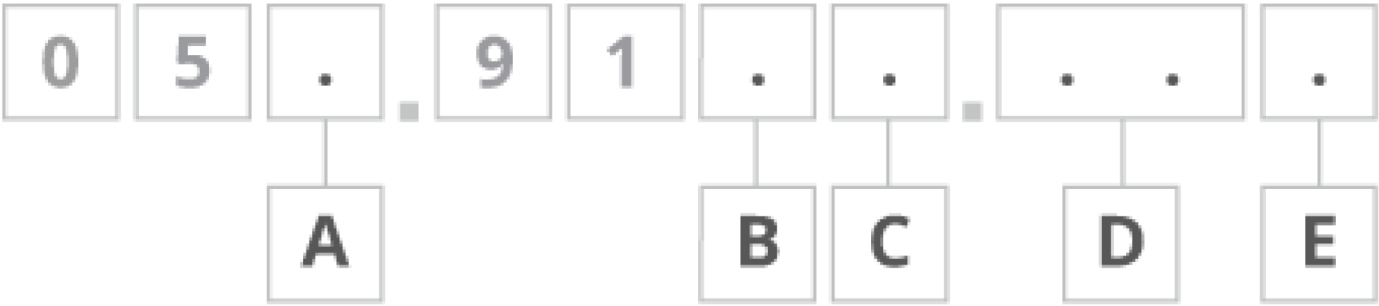

A	B	C	D	E
Code	**Code**	**Ingress Protection**	**Pumphead**	**Plug options**
0: Pump	3: S	1: IP31/NEMA 2	EL: 520REL	U: UK mains plug
6: Drive only	4: U	N: IP66/NEMA 4X	EM: 520REM	E: EU mains plug
	5: Du	S: SCADA IP66/NEMA 4X[1,2]	EH:520REH	A: American mains plug
	6: Bp		ET: 520RET	K: Australia mains plug
	8: En		2L: 520R2	R: Argentina mains plug
	9: Pn		10: 520R	C: Swiss mains plug
			5L: 505L[3]	D: India/South Africa mains plug
				B: Brazillian mains plug
				Z: China mains plug

Notes:

1. U and Du models only
2. Only available with American mains plug
3. With the exception of Bp, En and Pn models, this option has an engineered product code – consult factory for more information

Disclaimer: All flow rates shown were obtained pumping water at 20 °C (68 °F) with zero suction and delivery heads. The information contained in this document is believed to be correct but Watson-Marlow Limited accepts no liability for any errors it contains and reserves the right to alter specifications without notice. It is the user's responsibility to ensure product suitability for use within their application. Watson-Marlow, LoadSure, Pumpsil, PureWeld XL, Bioprene, Marprene are registered trademarks of Watson-Marlow Limited. Tri-Clamp is a registered trademark of Alfa Laval Corporate AB. GORE and STA-PURE are registered trademarks of W.L. Gore and Associates. Please state the product code when ordering pumps and tubing.

wmfts.com/global
08 May 2026